INTERNATIONAL COMPUTER SCIENCE INSTITUTE

1947 Center St. • Suite 600 • Berkeley, California 94704-1198 • (510) 643-9153 • FAX (510) 643-7684

A Management Platform for Global Area ATM Networks

Roya Ulrich
ulrich@icsi.berkeley.edu

TR-96-018

May 1996

Abstract

Technological progress has made providing numerous new services to large number of users possible. Concurrently, we also experience an increased interest in real-time and interactive applications, e. g. teleseminaring, video conferencing and application sharing, in particular, because of the worldwide and decentralized character of today's research and development organizations.

The International Computer Science Institute (ICSI) is a participant of the first transatlantic ATM link which is an integral part of the Multimedia Applications on Intercontinental Highways (MAY) Project. Additionally, ICSI is attached to the Bay Area Gigabit Network (BAGNet) providing ATM connectivity at the best-effort basis. Both projects provide platforms to identify the key research and development topics in cooperative real-time communication.

The technical report gives a brief introduction to the ATM infrastructure at ICSI and addresses challenging management issues of multimedia applications in such global area ATM networks. We explore three management areas: *performance*, *configuration*, and *fault* management with respect to the user's point of view. Finally, we introduce a management platform and tools we have been developing which help the user to better predict the quality of service provided and to recover from faults occurred in the system or during a transmission.

1 Introduction

Technological progress has made providing numerous new services to large number of users possible. Concurrently, we also experience an increased interest in real-time and interactive applications, e. g. teleseminaring, video conferencing and application sharing, in particular, because of the worldwide and decentralized character of today's research and development organizations.

The network infrastructure of ICSI provides access to two multi-institutional ATM trials: Multimedia Applications on Intercontinental Highway (MAY) and Bay Area Gigabit Network (BAGNet). Nine SUN workstations equipped with multimedia hardware (e. g. microphone, camera, video card) are attached over 155 Mbps fiber optical links to ICSI's local ATM SynOptic switch. This infrastructure, illustrated in Figure 1, provides a platform to analyze multimedia traffic and to evaluate point-to-point and multicast services and mechanisms. Major objectives of both projects are development of multimedia applications which will utilize high speed and reliable communication environment.

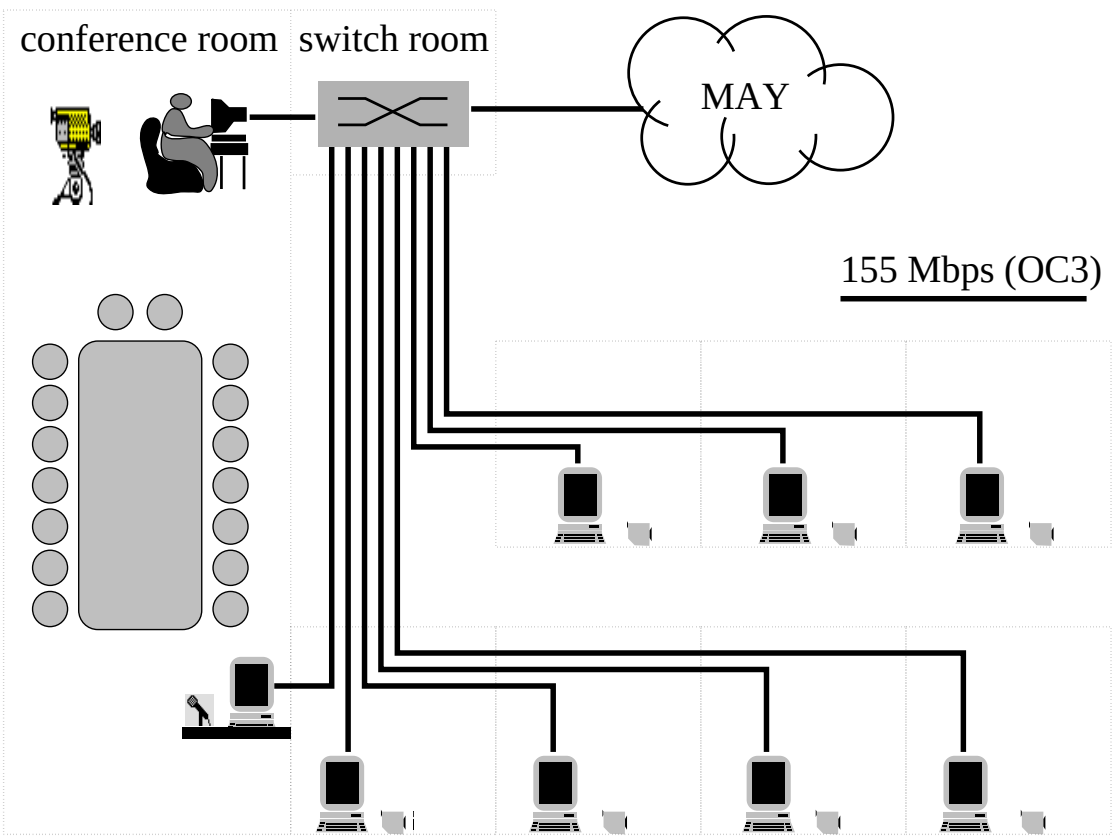

Figure 1: ATM Configuration at ICSI

The MAY[1] network, funded by Deutsche Telekom and Sprint International, spans from Berlin to Berkeley over London, Reston, Burlingame and Oakland. This ATM link provides connection-oriented services based on semi-permanent virtual channels (PVC). The provided PVCs are carried by different international telecommunication companies providing the sub-links. Table 1 gives a summary of the technical data of the MAY project.

link			**capacity [Mbps]**	**carrier**
Berkeley	-	Oakland	155	Pacific Bell
Oakland	-	Burlingame	45	Pacific Bell
Burlingame	-	Reston	1.5	Sprint International
Reston	-	London	34	Sprint International
London	-	Berlin	2	British Telecom/ Deutsche Telekom

Table 1: Transatlantic MAY ATM Link

The second ATM trial, BAGNet[2] funded by Pacific Bell[3], connects fifteen commercial, education, and research organizations in the San Francisco Bay Area. Each site is attached with four PVCs of 2 Mbps to the Pacific Bell switches in Oakland and Palo Alto. BAGNet provides just a best-effort service, i. e. there are no quality of service guarantees, and therefore, no negotiation is necessary. Teleseminaring is one of the most important applications over BAGNet and is done by using MBone toolkit [4] which allows the transmission of multimedia sessions over UDP/IP.

In both networks, MAY and BAGNet, the end-to-end data transmission uses IP over ATM [1]. In order to ensure the interoperability, each site is required to support classical IP over ATM according to RFC 1577 [5] which specifies a protocol for the automatic resolution of IP addresses to the pre-configured ATM addresses (ATMARP). Multimedia applications are then built on top of Internet transport protocols as TCP and UDP by using lightweight protocols in the user application level like RTP (real time transport protocol [7]). The structure of the underlying hierarchy of protocols is illustrated in Figure 2.

This technical report addresses challenging management issues pertaining to multimedia applications in global area ATM networks like MAY and BAGNet. The term "global" refers to the large geographical scale of the networks but also to the necessity

[1]For detailed information about MAY refer to: *http://icsi.berkeley.edu/MAY/index.html.*

[2]For detailed information about BAGNet refer to: *http://icsi.berkeley.edu/BAGNet/index.html.*

[3]BAGNet funding will end in July 1996.

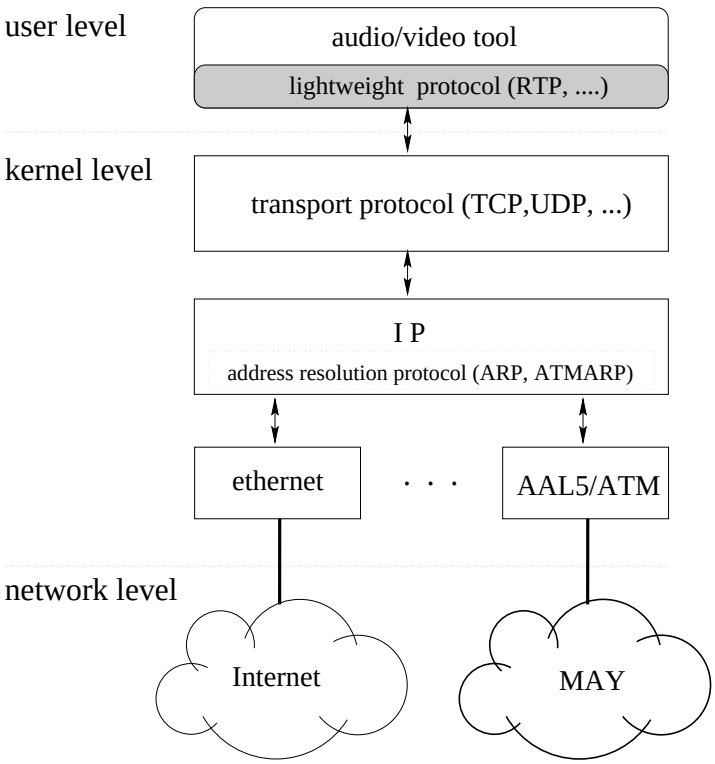

Figure 2: Protocol Hierarchy

of interaction with existing communication systems. In the following, we explore different management functional areas of the ATM networks with respect to the user's point of view (Section 2). Finally, we describe monitoring tools we have been developing which help the user to predict the quality of service provided (Section 3).

2 Key Functional Capabilities

Provision of reliable ATM services still requires considerable effort with currently available hardware and software. Major difficulties are, however, to cope with the changing quality of service parameters. Traffic requirements and behavior are permanently subject to change as users activities and resource utilization vary in an unpredictable manner. Network as well as the operating system can handle time requirements and share resources optimal among several active multimedia applications only if proper information about traffic characteristics are available. To provide this information the service user has to know what the demand on resources for a certain real-time application is. The information about the traffic generated by an application also helps to improve its performance in terms of the execution time and required resources. Dealing with these problems refers to the functional area: *performance* management. Monitoring of traffic is an essential step to support performance

management in any network. However, because of the dynamic traffic behavior, the on-line monitoring and the on-line analysis of values becomes more important in real-time communication. The on-line evaluation of quantitative performance measurements like:

- statistics relating to traffic, for instance: sending and receiving rate, experienced delay and loss in each protocol layer, etc.,
- statistics relating to resources, for instance: CPU and memory utilization, bandwidth usage or wastage caused by each user process, etc.,

helps the service user to develop control mechanisms to react to the resource requirements and availabilities. Regarding the measured information, more system resources in terms of processor times, memory, buffer or link capacity, can be allocated to achieve better quality. Reserved, but unused, resources could also be released for other applications.

Other significant tasks necessary for real-time communication over ATM refer to the functional areas of *configuration* and *fault* management which comprise switch reconfiguration in case of congestion and faults. From the service user's point of view, our experiences have shown that the deficient of information exchange among different ATM switches often has a negative impact on fault recovery and repairing. Dealing with these problems demands that the system maintainer have access to:

- information relating to the status of the ATM switch, or of a certain virtual channel,
- information relating to the status of all intermediate ATM switches along a virtual channel, and
- facilities of automatic and on-demand reconfiguration of the local switch (or remote switches in an authorized domain).

Configuration and fault management become (particularly in global area ATM networks like MAY) very difficult because of their multi-carrier and distributed character. Additionally, the lack of a standard and vendor-independent signaling protocol, i.e. a protocol to setup, maintain and release of virtual connections with guaranteed qualities, leads to manual execution of most configuration tasks. This is quite troubling when considering the different time-zones which prevents reaching all system administrators at the same time.

3 Management Tools

The management operations mentioned above are very complex and cannot be performed manually, therefore, they should be supported by efficient tools. As far as the underlying mechanism of these management tools is concerned, they have to:

- provide comprehensive information at a moderate level of detail to achieve an overall view of the system without imposing large overhead, and
- work in a time-efficient and reliable manner to avoid delays and errors.

The latter one becomes an imperative requirement for real-time communication in order to be able to satisfy performance objectives required by such applications.

At ICSI, we are currently developing a management platform for ATM networks regarding the functional areas mentioned above. Our objective is to provide a system manager (i. e. the application provider and the system maintainer) in an ATM environment with tools to collect and to evaluate on-line information about resource utilization, as well as traffic characteristics (cf. Figure 3)

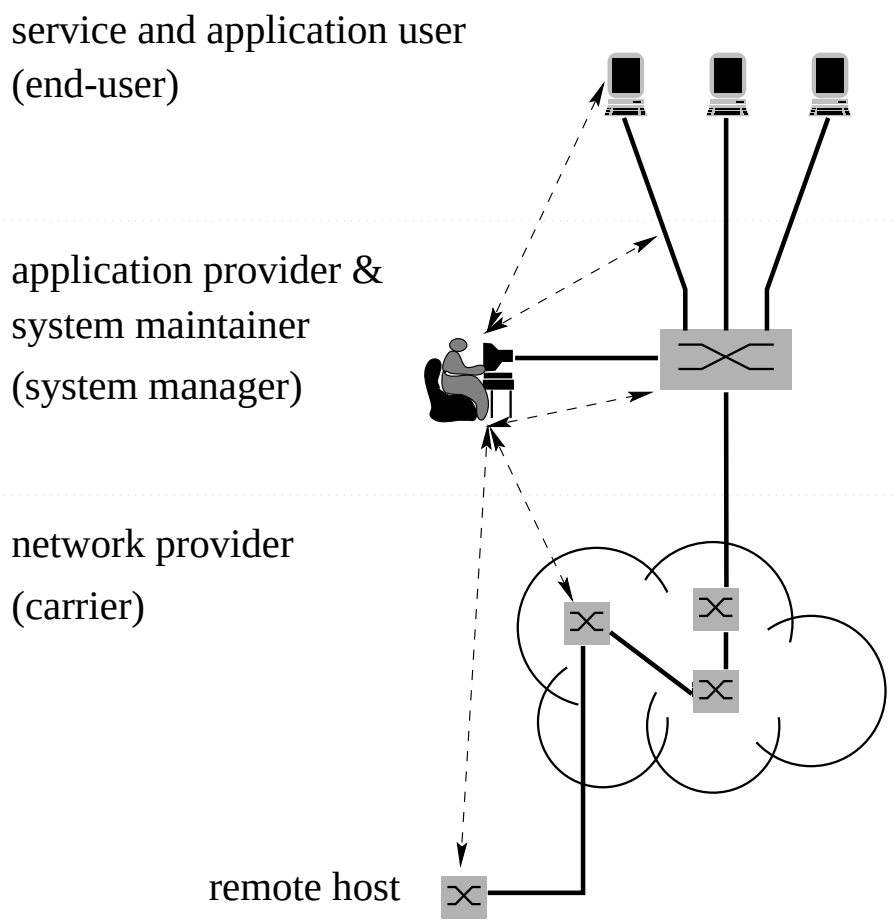

Figure 3: Information-based System Management

This platform will also help the system manager to gain a global view over the network configuration and its utilization. In the following, two tools of the management platform are introduced briefly.

3.1 Performance Management

The on-line traffic monitor, JAM (Java tool for traffic Analyzing and Monitoring[4]), allows the user to configure an RTP-based multimedia session and to collect statistics about incoming and outgoing packets with respect to different protocol layers involved. JAM evaluates and visualizes the gathered information on-line. In this way, it gives the user a means for observation and performance-driven control of the session.

At the current developmental stage, JAM supports the setup of a bidirectional point-to-point MBone session and provides the following performance values separately for each video and audio stream at RTP, UDP and IP level:

- transmission capacity required, and
- end-to-end loss rate experienced.

In addition, the distribution of interarrival times at the IP packets level is evaluated. All measurements can be stored in text files and can be evaluated or visualized by later studies. Figure 4 illustrates an example for a session configuration and measurement using JAM.

We are working on extension of JAM by mechanisms to gather information from ATM cell level. Several problems arise at the ATM level because:

- available ATM hard- and software do not provide sufficient means for cell traffic measurements within an accurate time scale, and
- evaluation of data recorded with a fine granularity imposes excessive overheads in processing and storage resources[5].

If an ATM switch provides an interface for standard management protocols like SNMP (simple network management protocol), it is conceivable to implement an agent process collecting proper cell information. The problem still remains that a universal solution cannot be proposed if not all ATM switch products provide at least such a standard interface.

An additional focus for future extensions of JAM is integration of data collection related to the operating system status during a certain multimedia session. This will help us to learn more about the system resources being shared between different active real-time processes and about the time being spent in different process states. Understanding these topics is essential for our future research work related to real-time operating systems.

[4]JAM is implemented using Java toolkit [3] by Andreas März in his Master's Thesis [6] at ICSI.

[5]The latest two-days long measurements of ATM cell traffic in BAGNet with a time stamp accuracy of $50ns$ supplied a huge amount of raw data, approximatively 50 Gbyte which can barely be evaluated by available evaluation tools.

Figure 4: JAM - Java tool for traffic Analyzing and Monitoring

In summary, the information gained by JAM can be used to develop mechanisms to trigger congestion control and to deal with resource management under variable communication conditions. Additionally, the measurements can be used as the input to fit the parameters of a performance model to the key properties of real data stream.

3.2 Configuration and Fault Management

Management of semi-permanent virtual channels in an ATM network demands high flexibility. However, this task is done manually and in a static manner right now. As an important part of our management platform, we are working on the design of a tool[6] to support the system manager by

- mapping of virtual channel identifiers to host names,
- fault recovery in the local, as well as in a remote switch, and
- on-demand reconfiguration of the ATM switch.

To achieve these objectives, all information about the local ATM environment (devices, addresses, VPI/VCI-tables, etc.) is stored in a Management Information Base (MIB). The configuration and monitoring of virtual channels are performed by using a world wide web browser as the graphical user interface. Hence, the MIB can be read and modified over the web browser. Management agents maintaining the MIB access devices over SNMP. Periodic polling of devices is realized using a Java SNMP-package.

Both, using a web browser as the front-end and using Java for remote and periodic execution of programs over web, provide a means for building a global view about the connection status in the network. Figure 5 illustrates the major components of this configuration.

4 Conclusion and Future Work

The ATM trials at ICSI, MAY and BAGNet, provide opportunities to explore the challenging issues associated with the management of ATM-based broadband communication on a global scale. Identification of the key research and development topics requires particular performance measurements and evaluation of the system behavior. Because of the multi-administrative and distributed character of these networks, development of management schemes and tools giving the system manager a global view of the network and traffic conditions become imperative.

With respect to the user viewpoint, we are working on a management platform for such a global scale ATM network. In this report, we discussed several challenging

[6] Martin Bernhardt is implementing this management environment in his Master's Thesis [2] at ICSI.

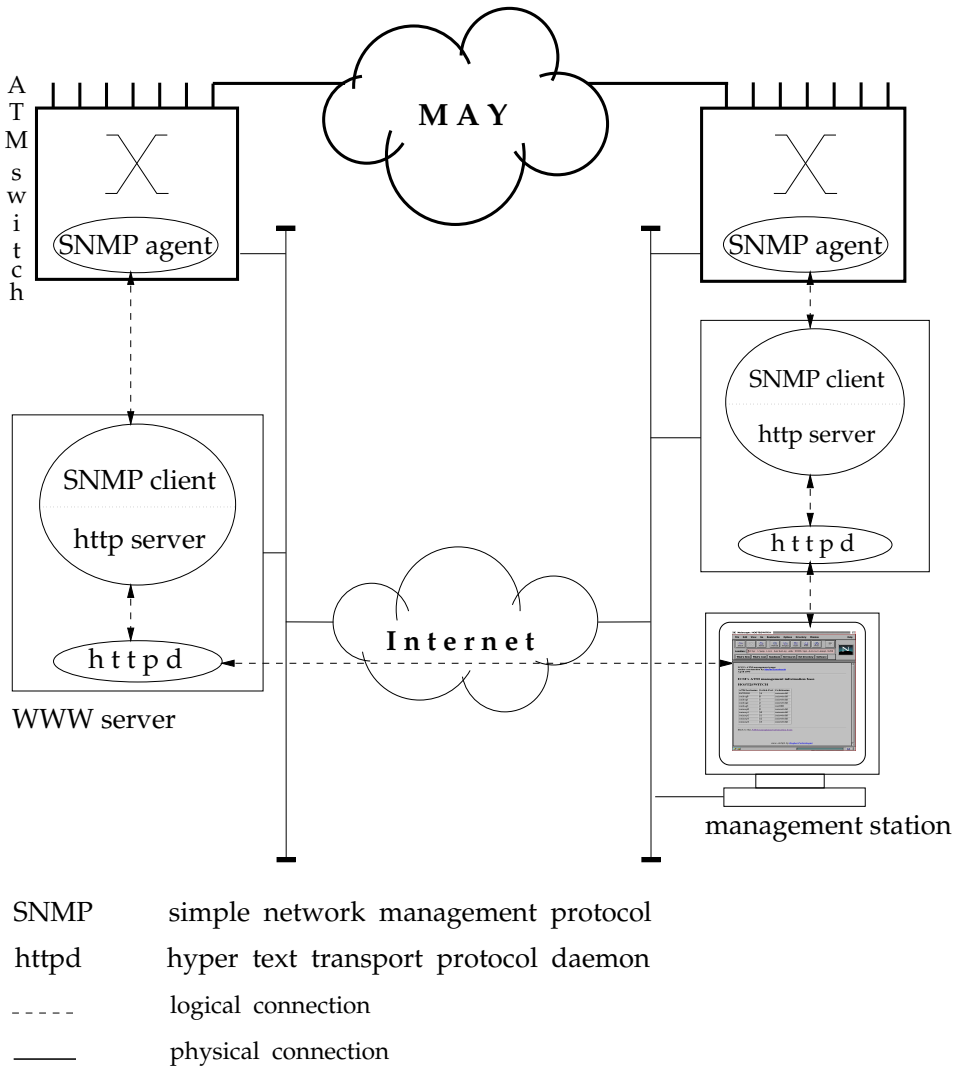

Figure 5: A Java Environment for ATM Configuration Management

issues and introduced two tools implemented to support performance, and configuration as well as fault management tasks.

Our future work is focused on appropriate monitoring methods at the ATM cell level and on the integration of the monitoring and control mechanisms for real-time operating systems. Our research also comprises embedding of *security* management in our platform.

Acknowledgments

I would like to express my appreciation to all members of the Networks Group at ICSI, in particular to *Rolf Siegle*, *Andreas März* and *Martin Bernhardt*, for their

contributions to the development of the management platform introduced in this technical report. Many words of thanks also to Dr. *Wolfgang Frohberg* (Alcatel SEL) and Professor *B. Wolfinger* (University of Hamburg) for their invaluable suggestions on this manuscript.

References

[1] A. Alles. ATM Internetworking. *Engineering InterOp, Las Vegas*, March 1995.

[2] M. Bernhardt. Conception and Implementation of a Configuration Management Tool for ATM Environments. Master's thesis, Universität Stuttgart and International Computer Science Institute (ICSI), 1996.

[3] http://java.sun.com/allabout.html. All About Java. Technical report, Sun Microsystems, 1995.

[4] V. Kumar. *MBone: Interactive Multimedia On The Internet.* Macmillan Publishing, 1995.

[5] M. Laubach. Classical IP and ARP over ATM. Technical Report RFC 1577, Internet Engineering Task Force, January 1994.

[6] A. März. An ATM Traffic Analyzer in Java. Master's thesis, Universität Erlangen–Nürnberg (IMMD VII) and International Computer Science Institute (ICSI), May 1996.

[7] Schulzrinne, Casner, Frederick, and Jacobson. RTP: A Transport Protocol for Real-Time Applications. Internet draft, Internet Engineering Task Force, 1996.